ASCO™ Solenoid Valves

2 way, NC/NO, Direct Operated, 1/8” or 1/4” Tapped

Features & Benefits

- *Wide range of flow and pressure ratings*
- *Quick disassembly of core tube for easy maintenance of internal parts*
- *Standard disc seal made of FPM, EPDM, NBR, RUBY suitable for a wide range of operating temperatures and compatible with many fluids*
- *Standard manual operator allows an easy installation (1/8” version only)*
- *AC/DC interchangeability of the solenoid without disassembly of the valve (1/8” version only)*
- *UL429 and EN 60335 certified*
- *NSF 169 and EC 1935 / 2004 certified see “15-DIGIT PRODUCT CODE”*
- *Compact and low weight valve*
- *The solenoid valves satisfy all relevant EU and EAC directives*

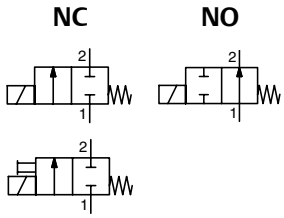

General

Differential pressure See «SPECIFICATIONS» [1 bar =100 kPa]
Ambient temperature range -10°C to +60°C (14°F to 140°F)
Maximum viscosity 40 cSt (mm²/s)
Response time 10 - 20 ms (1/8” version)
20 - 70 ms (1/4” version)

fluids (∗)	temperature range (TS) (1)	materials (∗)
air, inert gas, water, oil hot water and steam (2)	0°C to +130°C (32°F to 266°F)	FPM (fluoroelastomer)
	-10°C to +170°C (14°F to 338°F)	RUBY disc (FPM seal)
air, inert gas, water hot water and steam (2)	-10°C to +140°C (14°F to 284°F)	EPDM (ethylene propylene diene monomer)
air, inert gas, water, oil	-10°C to +90°C (14°F to 194°F)	NBR (nitrile)
refrigerating fluids	-10°C to +90°C (14°F to 194°F)	CR70N (chloroprene) (HNBR seal)

Materials in contact with fluid

(∗) Ensure that the compatibility of the fluids in contact with the materials is verified

Body Brass or stainless steel, AISI 316
Shading coil Copper
Core tube Stainless steel
Core and plugnut Stainless steel
Springs Stainless steel
Seal FPM or EPDM or NBR or HNBR
Disc FPM or EPDM or RUBY or NBR or CR70N
Seat Brass or Stainless Steel AISI 303

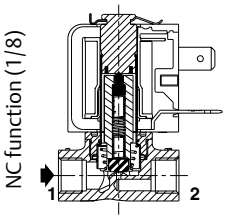

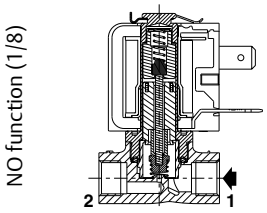

Electrical characteristics

Coil insulation class F (H - approval pending)
Connector Spade plug (cable Ø 6-8 mm or Ø 6-10 mm)
Connector specification DIN 43650, 11 mm, industry standard B (type 01) or ISO 4400 / EN 175301-803, form A (type 02)
Electrical safety IEC 335
Electrical enclosure protection Moulded IP67 (EN 60529) with plug-connector
Standard voltages DC (=) : 12 - 24V (+10% -5%)
(Other voltages and frequencies on request) AC (~) : 24V/50-60 Hz - 110V/50 Hz (120 V/60Hz) 230V/50-60 Hz (+10% -15%)

operator ambient temperature range (TS)	power ratings			replacement coil			Type
	holding ~		hot/cold =	~		=	
°C (°F)	(VA)	(W)	(W)	120 V/60 Hz, 110 V/50 Hz	230 V /50-60 Hz	24 V DC	
-10 to +60 (14 to 140)	4.5	3	3.5	533534-024	533534-003	533534-001	01
	-	-	5	-	-	533534-002	
	8	6	-	-	533534-023	-	
	-	-	5	-	-	533593-001	02
	14	9	9	533593-020	533593-003	533593-002	
	-	-	5.5	-	-	511952-006	03

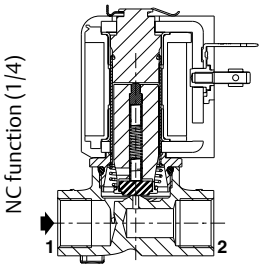

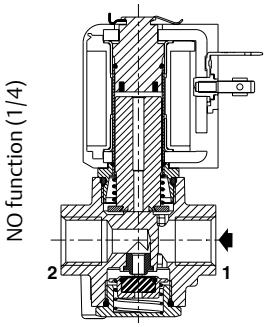

Options

- NSF 169, EC 1935 / 2004 approval,
  EPDM/FPM disc and seal (Food Grade), RUBY disc, stainless steel seat
  The use of rigid sealings (RUBY) with gaseous fluids implies a slight leakage, generally limited at 2 scc/min at 1 bar pressure (0.002 l/min).

(∗) Ensure that the compatibility of the fluids in contact with the materials is verified.
(1) The minimum ambient temperature of the solenoid valve is determined by the limitations of minimum temperature indicated.
(2) Steam only for 1/4” version with stainless steel seat or body.

01527GB-2022/R01
Availability, design and specifications are subject to change without notice. All rights reserved.

Specifications [1]

pipe size	orifice size mm (in)	flow coefficient Kv m³/h (Cv)	flow coefficient Kv (l/min)	operating pressure differential bar (psi) min.	max. (PS) air (✳) ~	max. (PS) air (✳) =	max. (PS) water (✳) ~	max. (PS) water (✳) =	max. (PS) oil (✳) ~	max. (PS) oil (✳) =	power coil (W) ~	power coil (W) =	thread type	dimensions / type [2]	15-DIGIT PRODUCT CODE brass	stainless steel	options without manual operator	with manual operator	voltage code 230 V/50-60 Hz	110 V/50 Hz (120 V / 60 Hz)	24 V/50-60 Hz	12 V/DC	24 V/DC
NC - Normally closed, FPM disc and seal																							
1/8	1.2 (3/64)	0.051 (0.06)	0.85	0	30 (435)	20 (290)	30 (435)	20 (290)	30 (435)	20 (290)	3	3.5	G	01	G256C134S1	G256C144S1	V00	V01	FH	F0	FQ	F3	F1
													NPT	01	8256C134S1	8256C144S1							
					-	26 (377)	-	26 (377)	-	26 (377)	-	5	G	01	G256C149S1	G256C159S1							
													NPT	01	8256C149S1	8256C159S1							
	1.6 (1/16)	0.08 (0.09)	1.33	0	30 (435)	12 (174)	30 (435)	12 (174)	30 (435)	12 (174)	3	3.5	G	01	G256C135S1	G256C145S1							
													NPT	01	8256C135S1	8256C145S1							
					-	16 (232)	-	16 (232)	-	16 (232)	-	5	G	01	G256C150S1	G256C160S1							
													NPT	01	8256C150S1	8256C160S1							
	2 (5/64)	0.12 (0.14)	1.99	0	15 (218)	6 (87)	15 (218)	6 (87)	15 (218)	6 (87)	3	3.5	G	01	G256C136S1	G256C146S1							
													NPT	01	8256C136S1	8256C146S1							
		0.11 (0.13)	1.83	0	-	7 (102)	-	7 (102)	-	7 (102)	-	5	G	01	G256C151S1	G256C161S1							
													NPT	01	8256C151S1	8256C161S1							
	2.4 (3/32)	0.14 (0.16)	2.32	0	13 (189)	4 (58)	13 (189)	4 (58)	13 (189)	4 (58)	3	3.5	G	01	G256C137S1	G256C147S1							
													NPT	01	8256C137S1	8256C147S1							
					-	6 (87)	-	6 (87)	-	6 (87)	-	5	G	01	G256C152S1	G256C162S1							
													NPT	01	8256C152S1	8256C162S1							
	3.2 (1/8)	0.18 (0.21)	2.99	0	7 (102)	2 (29)	7 (102)	2 (29)	7 (102)	2 (29)	3	3.5	G	01	G256C138S1	G256C148S1							
													NPT	01	8256C138S1	8256C148S1							
					-	3 (44)	-	3 (44)	-	3 (44)	-	5	G	01	G256C153S1	G256C163S1							
													NPT	01	8256C153S1	8256C163S1							
1/4 [3]	1.6 (1/16)	0.10 (0.11)	1.59	0	30 (435)	30 (435)	30 (435)	30 (435)	30 (435)	30 (435)	-	5	G*	02	G256C102S1	G256C111S1	V00	-					
													NPT	02	8256C102S1	8256C111S1							
											9	9	G*	02	G256C119S1	G256C127S1							
													NPT	02	8256C119S1	8256C127S1							
	2.4 (3/32)	0.18 (0.21)	2.99	0	-	18 (261)	-	18 (261)	-	18 (261)	-	5	G*	02	G256C104S1	G256C113S1							
													NPT	02	8256C104S1	8256C113S1							
					20 (290)	20 (290)	20 (290)	20 (290)	20 (290)	20 (290)	9	9	G*	02	G256C121S1	G256C129S1							
													NPT	02	8256C121S1	8256C129S1							
	3.2 (1/8)	0.30 (0.35)	5.03	0	-	6 (87)	-	6 (87)	-	6 (87)	-	5	G*	02	G256C106S1	G256C115S1							
													NPT	02	8256C106S1	8256C115S1							
					15 (218)	12 (174)	15 (218)	12 (174)	15 (218)	12 (174)	9	9	G*	02	G256C123S1	G256C131S1							
													NPT	02	8256C123S1	8256C131S1							
	4.5 (11/64)	0.40 (0.46)	6.64	0	-	3 (44)	-	3 (44)	-	3 (44)	-	5	G*	02	G256C107S1	G256C116S1							
													NPT	02	8256C107S1	8256C116S1							
					8 (116)	6 (87)	8 (116)	6 (87)	8 (116)	6 (87)	9	9	G*	02	G256C124S1	G256C132S1							
													NPT	02	8256C124S1	8256C132S1							
	5 (13/64)	0.48 (0.55)	7.92	0	-	2 (29)	-	2 (29)	-	2 (29)	-	5	G*	02	G256C108S1	G256C117S1							
													NPT	02	8256C108S1	8256C117S1							
					5 (73)	4 (58)	5 (73)	4 (58)	5 (73)	4 (58)	9	9	G*	02	G256C125S1	G256C133S1							
													NPT	02	8256C125S1	8256C133S1							

[1] All performances are referred to Ambient Temperature = +60°C.
[2] For dimensions, see drawing(s) for each construction type on the following page(s).
[3] Steam: . RUBY Sealing PS max. 8 bar (max. temperature of fluid 170°C)
. EPDM Sealing PS max. 4 bar (max. temperature of fluid 140°C)
. FPM Sealing PS max. 2.8 bar (max. temperature of fluid 130°C)

(✳) Ensure that the compatibility of the fluids in contact with the materials is verified.

01527GB-2022/R01
Availability, design and specifications are subject to change without notice. All rights reserved.

Specifications [1]

pipe size	orifice size	flow coefficient Kv		operating pressure differential bar (psi)							power coil (W)		thread type	dimensions / type [2]	15-DIGIT PRODUCT CODE								
					max. (PS)												options		voltage code				
					air (∗)		water (∗)		oil (∗)														
	mm (in)	m³/h (Cv)	(l/min)	min.	~	=	~	=	~	=	~	=			brass	stainless steel	without manual operator	with manual operator	230 V/50-60 Hz	110 V/50 Hz (120 V / 60 Hz)	24 V/50-60 Hz	12 V/DC	24 V/DC
NO - Normally open, FPM disc and seal																							
1/8	1.2 (3/64)	0.05 (0.06)	0.85	0	17 (247)	-	17 (247)	-	17 (247)	-	6	-	G	01	**G256C230S1**	**G256C242S1**	**V00**	**-**	**FH**	**F0**	**FQ**	**F3**	**F1**
													NPT	01	**8256C230S1**	**8256C242S1**							
		0.05 (0.06)	0.83	0	-	17 (247)	-	17 (247)	-	17 (247)	-	5.5	G	03	**G256C246S1**	**G256C250S1**							
													NPT	03	**8256C246S1**	**8256C250S1**							
	1.6 (1/16)	0.08 (0.09)	1.33		17 (247)	-	17 (247)	-	17 (247)	-	6	-	G	01	**G256C231S1**	**G256C243S1**							
													NPT	01	**8256C231S1**	**8256C243S1**							
				0	-	10 (145)	-	10 (145)	-	10 (145)	-	5.5	G	03	**G256C247S1**	**G256C251S1**							
													NPT	03	**8256C247S1**	**8256C251S1**							
NO - Normally open, FPM disc and seal, stainless steel seat																							
1/4[3]	3.2 (1/8)	0.3 (0.35)	5.0	0	4 (58)		4 (58)		4 (58)		9	9	G	02	**G256C216S1**	**-**	**9DQ**	**-**	**FH**	**F0**	**FQ**	**F3**	**F1**
													NPT	02	**8256C216S1**	**-**							
NO - Normally open, FPM disc and seal (Food Grade), stainless steel seat + NFS + EC 1935 / 2004																							
1/4[3]	3.2 (1/8)	0.3 (0.35)	5.0	0	4 (58)		4 (58)		4 (58)		9	9	G	02	**G256C216S1**	**-**	**9DH**	**-**	**FH**	**F0**	**FQ**	**F3**	**F1**
													NPT	02	**8256C216S1**	**-**							

[1] All performances are referred to Ambient Temperature = +60°C.
[2] For dimensions, see drawing(s) for each construction type on the following page(s).
[3] Steam: FPM Sealing PS max. 2.8 bar (max. temperature of fluid 130°C)

(∗) Ensure that the compatibility of the fluids in contact with the materials is verified.

01527GB-2022/R01
Availability, design and specifications are subject to change without notice. All rights reserved.

Product selection guide

PRODUCT CODE

G 256 C 134 S1 V00 F1

Configurator - CAD Files

Connection Type
G = ISO 228/1 (1/8" or 1/4")
8 = NPT (SAE 71051)

Product series
256

Revision letter
C = Initial release

Valves version [2]

Electrical interface
S1 = With spade plug connector
S0 = Without spade plug connector
L0 = Leaded coil (1/8" - 1/4", 500 mm cable length)

[2] 1/8" NC, coil size 30, please contact us to obtain catalogue numbers available and technical information.

Voltage
F1 = 24 V DC Class F
F3 = 12 V DC Class F
FQ = 24 V / 50-60 Hz Class F
F0 = 110 V / 50 Hz (120 V / 60 Hz) Class F
FH = 230 V / 50-60 Hz Class F
ET = 220-230 V / 50 Hz 208-240 V / 60 Hz Class F [1]
H1 = 24 V DC Class H
HH = 230 V / 50-60 Hz Class H

Options

Without manual operator
E00 = EPDM Disc and Seal
V00 = FPM Disc and Seal
N00 = NBR Disc and Seal
J00 = CR70N Disc (HNBR Seal) [3]
X00 = RUBY Disc (FPM Seal) [3] [1]
9CJ = RUBY Disc (FPM Seal) + NSF + EC 1935 / 2004 [3] [1]
9CK = EPDM Disc and Seal (Food Grade) + NSF + EC 1935 / 2004 [4]
9CM = FPM Disc and Seal (Food Grade) + NSF + EC 1935 / 2004
9DF = EPDM Disc and Seal (Food Grade) + Stainless Steel Seat + NSF + EC 1935 / 2004 [3]
9DH = FPM Disc and Seal (Food Grade) + Stainless Steel Seat +NFS + EC 1935 / 2004 [3]
9DP = EPDM Disc and Seal + Stainless Steel Seat [3]
9DQ = FPM Disc and Seal + Stainless Steel Seat [3]
9DY = RUBY Disc (FPM Seal) + Stainless Steel Seat [3] [1]
9ED = RUBY Disc (FPM Seal) + Stainless Steel Seat + NSF + EC 1935 / 2004 [3] [1]

With manual operator [5]
(With maintained manual operator)
E01 = EPDM Disc and Seal, w/ Manual Operator
V01 = FPM Disc and Seal, w/ Manual Operator
N01 = NBR Disc and Seal, w/ Manual Operator
9CE = EPDM Disc and Seal (Food Grade), w/ Manual Operator + NSF + EC 1935 / 2004
9CW = FPM Disc and Seal (Food Grade), w/ Manual Operator + NSF + EC 1935 / 2004

[1] To obtain the correct pressure rating and power absorption check the landing pages of the online configurator. Operating Voltage Range (+10% -10%).
[3] Only for 1/4" Version.
[4] Not available for NO Version.
[5] Not available for 1/4" Version and NO Version.

01527GB-2022/R01
Availability, design and specifications are subject to change without notice. All rights reserved.

Repair Kits and Service Parts - Spare Parts Kits

		Spare parts kits no. (✳)												
		EPDM Disc and Seal	FPM Disc and Seal	NBR Disc and Seal	-	-	-	-	-	-	-	-	-	-
NC - Normally closed - 1/4" - AC (~)														
256C119/121/123/124/125/127/129/129/131/132/133	**M200706**	**E00**	**V00**	**N00**	-	-	-	-	-	-	-	-	-	-
NC - Normally closed - 1/4" - DC (=)														
256C119/121/123/124/125/127/129/129/131/132/133	**M200714**	**E00**	**V00**	**N00**	-	-	-	-	-	-	-	-	-	-
NO - Normally open - 1/4" - AC (~) / DC (=)														
256C216	**M200716**	-	-	-	-	-	-	-	-	-	-	-	-	-

		EPDM Disc and Seal (Food Grade) + NSF + EC 1935 / 2004 + Stainless Steel Seat	FPM Disc and Seal (Food Grade) + NSF + EC 1935 / 2004 + Stainless Steel Seat	RUBY Disc (FPM Seal) + Stainless Steel Seat + NSF + EC 1935 / 2004	-	-	RUBY Disc (FPM Seal) + NSF + EC 1935 / 2004	EPDM Disc and Seal (Food Grade) + NSF + EC 1935 / 2004	FPM Disc and Seal (Food Grade) + NSF + EC 1935 / 2004	EPDM Disc and Seal + Stainless Steel Seat	FPM Disc and Seal + Stainless Steel Seat	RUBY Disc (FPM Seal) + Stainless Steel Seat	CR 70N Disc (HNBR Seal)	RUBY Disc (FPM Seal)
NC - Normally closed - 1/4" - AC (~)														
256C119/121/123/124/125/127/129/129/131/132/133	**M200706**	**9DF**	**9DH**	-	-	-	-	**9CK**	**9CM**	**9DP**	**9DQ**	-	**J00**	**X00**
256C106/107/115/116/123/124/131/132	**M200707**	-	-	**9ED**	-	-	**9CJ**	-	-	-	-	**9DY**	-	-
NC - Normally closed - 1/4" - DC (=)														
256C119/121/123/124/125/127/129/129/131/132/133	**M200714**	**9DF**	**9DH**	-	-	-	-	**9CK**	**9CM**	**9DP**	**9DQ**	-	**J00**	**X00**
256C106/107/115/116/123/124/131/132	**M200715**	-	-	**9ED**	-	-	**9CJ**	-	-	-	-	**9DY**	-	-
NO - Normally open - 1/4" - AC (~) / DC (=)														
256C216	**M200716**	-	**9DH**	-	-	-	-	-	-	-	**9DQ**	-	-	-

01527GB-2022/R01
Availability, design and specifications are subject to change without notice. All rights reserved.

Installation

- The solenoid valves can be mounted in any position without affecting operation
- Solenoid valves have 2 mounting holes in body
- Thread connection “G” applicable for 1/8, have standard thread according to ISO 228/1
- Thread connection “8” have standard thread = NPT (SAE 71051)
- Installation/maintenance instructions are included with each valve

Dimensions mm (inches), **Weight** kg (Lbs)

Configurator - CAD Files

TYPE 01
Electrical interface “S1”
Coil size 20 mm - Thermoplastic moulded
IEC 335 / DIN 43650
IP67

NC (1/8”): 256C**134** to**163**

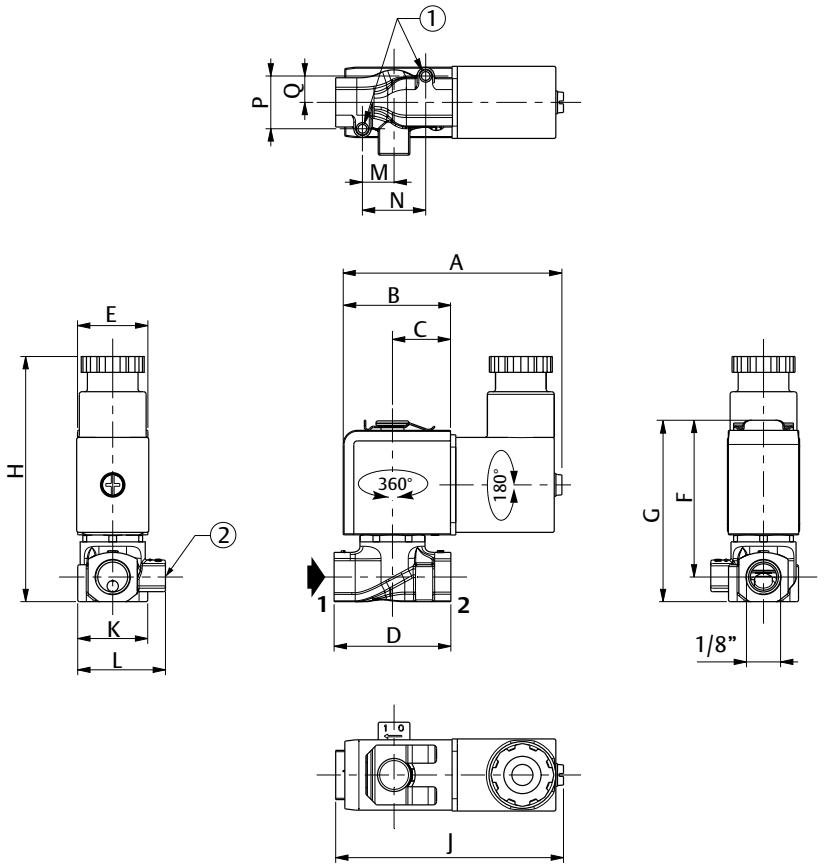

(1) 2 mounting holes:
M3 dia., through holes (0.12 inch dia.)
(2) Manual operator location

size 20		A	B	C	D	E	F	G	H	J	K	L	M	N	P	Q	weight (1)	
G256C134..G256C163	mm	61.9	30.5	16.5	33.2	20	44.6	54.9	69.7	64.8	19.9	24.95	9	18	15	7.5	0.116	kg
8256C134..8256C163	(in)	2.44	1.20	0.65	1.31	0.79	1.76	2.16	2.74	2.55	0.78	0.98	0.35	0.71	0.59	0.30	0.2556	(Lbs)

(1) Incl. coil(s) and connector(s).

01527GB-2022/R01
Availability, design and specifications are subject to change without notice. All rights reserved.

Dimensions mm (inches), **Weight** kg (Lbs)

Configurator - CAD Files

NO (1/8”): 256C**230** to**245**

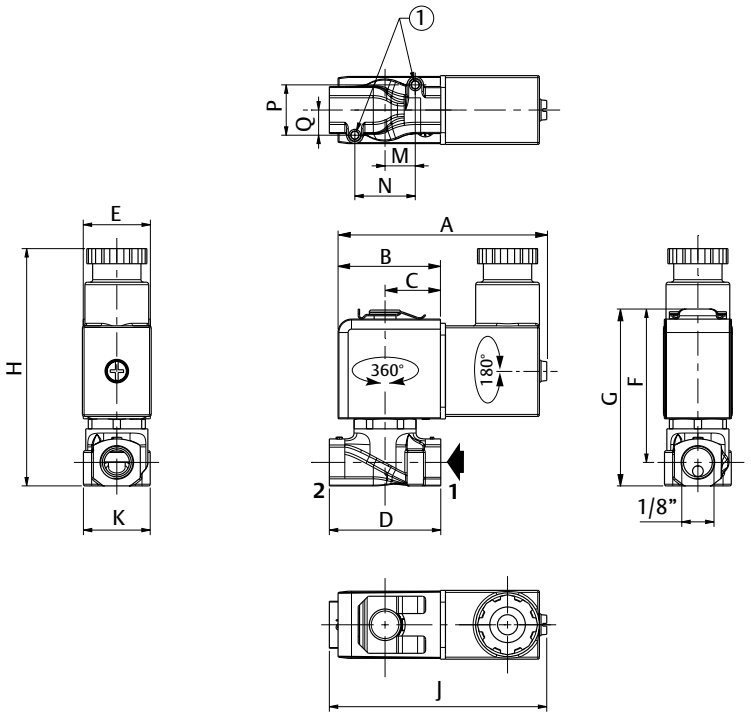

(1) 2 mounting holes:
M3 dia., through holes (0.12 inch dia.)

size 20		A	B	C	D	E	F	G	H	J	K	M	N	P	Q	weight (1)	
G256C122..G256C245	mm	61.9	30.5	16.5	33.2	20	45.7	54.9	70.7	64.8	19.9	9	18	15	7.5	0.116	kg
8256C122..8256C245	(in)	2.44	1.20	0.65	1.31	0.79	1.8	2.16	2.78	2.55	0.78	0.35	0.71	0.59	0.30	0.255	(Lbs)

(1) Incl. coil(s) and connector(s).

01527GB-2022/R01
Availability, design and specifications are subject to change without notice. All rights reserved.

Dimensions mm (inches), **Weight** kg (Lbs)

Configurator - CAD Files

TYPE 02
Electrical interface "S1"
Coil size 30 mm - Thermoplastic moulded
IEC 335 / ISO 4400
IP67
NC (1/4"): 256C**102** to**133**

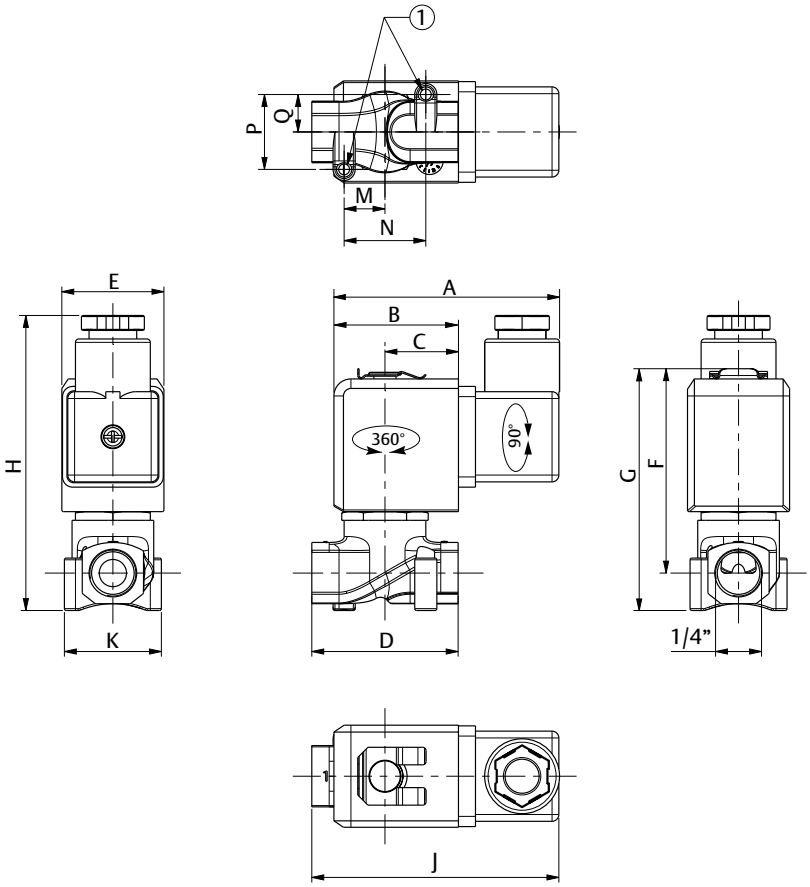

(1) 2 mounting holes:
M4 dia., through holes (0.16 inch dia.)

size 30		A	B	C	D	E	F	G	H	J	K	M	N	P	Q	weight (1)	
G256C100..G256C133	mm	66.3	36.6	21.6	43	30	60	70.5	86.7	72.6	28.5	12	24	22	11	0.3	kg
8256C100..8256C133	(in)	2.61	1.44	0.85	1.69	1.18	2.36	2.78	3.40	2.86	1.12	0.47	0.94	0.87	0.43	0.661	(Lbs)

(1) Incl. coil(s) and connector(s).

01527GB-2022/R01
Availability, design and specifications are subject to change without notice. All rights reserved.

Dimensions mm (inches), **Weight** kg (Lbs)

Configurator - CAD Files

NO (1/4"): 256C**201** to **221**

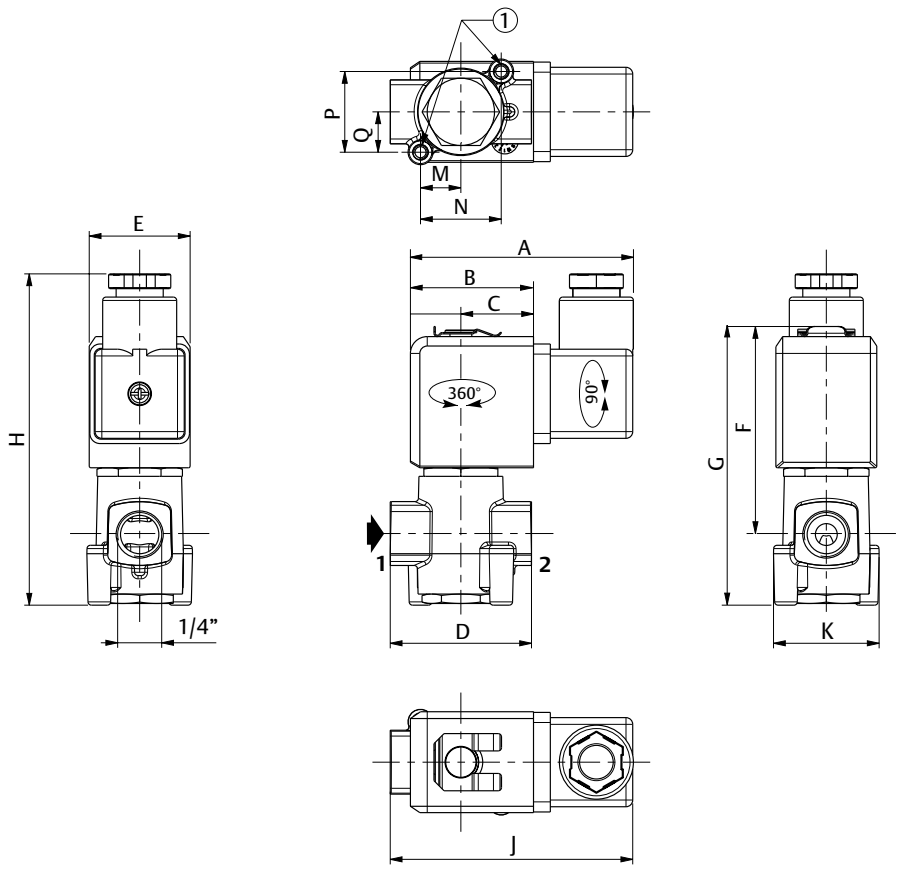

① 2 mounting holes:
M4 dia., depth 8 mm (0.16 inch dia., depth 0.31 inch)

size 30		A	B	C	D	E	F	G	H	J	K	M	N	P	Q	weight [1]	
G256C200..G256C221	mm	66.3	36.6	21.6	42	30	61.6	84.4	98.5	72.1	31.4	12	24	24	12	0.34	kg
8256C200..8256C221	(in)	2.61	1.44	0.85	1.65	1.18	2.42	3.32	3.88	2.80	1.24	0.47	9.94	0.94	0.47	0.75	(Lbs)

[1] Incl. coil(s) and connector(s).

01527GB-2022/R01
Availability, design and specifications are subject to change without notice. All rights reserved.

Dimensions mm (inches), **Weight** kg (Lbs)

Configurator - CAD Files

TYPE 03
Electrical interface "S1"
Coil size 30 mm - Thermoplastic moulded
IEC 335 / ISO 4400
IP67

NO (1/8"): 256C**246** to **253**

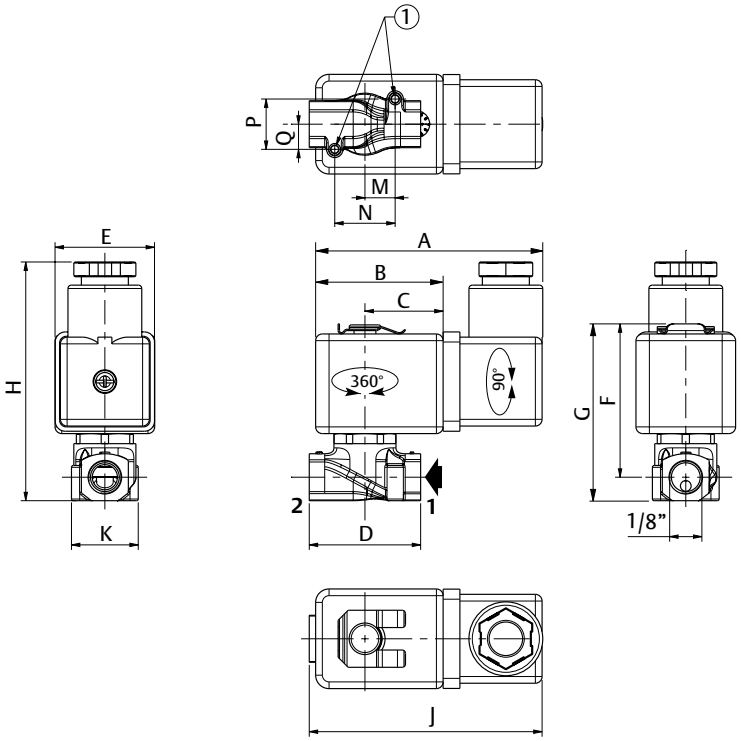

(1) 2 mounting holes:
M3 dia., through holes (0.12 inch dia.)

size 30		A	B	C	D	E	F	G	H	J	K	M	N	P	Q	weight (1)	
G256C246..G256C253	mm	67.7	38	23.3	33.2	29.7	45.7	52.7	71.2	69.4	19.9	9	18	15	7.5	0.20	kg
8256C246..8256C253	(in)	2.66	1.49	0.92	1.31	1.18	1.8	2.07	2.8	2.73	0.79	0.35	0.70	0.59	0.29	0.44	(Lbs)

(1) Incl. coil(s) and connector(s).

01527GB-2022/R01
Availability, design and specifications are subject to change without notice. All rights reserved.